Linux Virtual Server for Scalable Network Services

Wensong Zhang
National Laboratory for Parallel & Distributed Processing
Changsha, Hunan 410073, China
wensong@linuxvirtualserver.org, http://www.LinuxVirtualServer.org/

Abstract

This paper describes the motivation, design, internal implementation of Linux Virtual Server. The goal of Linux Virtual Server is to provide a basic framework to build highly scalable and highly available network services using a large cluster of commodity servers. The TCP/IP stack of Linux kernel is extended to support three IP load balancing techniques, which can make parallel services of different kinds of server clusters to appear as a service on a single IP address. Scalability is achieved by transparently adding or removing a node in the cluster, and high availability is provided by detecting node or daemon failures and reconfiguring the system appropriately.

1 Introduction

With the explosive growth of the Internet, Internet servers must cope with greater demands than ever. The potential number of clients that a server must support has dramatically increased, some hot sites have already received hundreds of thousands of simultaneous client connections. With the increasing number of users and the increasing workload, companies often worry about how their systems grow over time. Furthermore, rapid response and 24x7 availability are mandatory requirements for the mission-critical business applications, as sites compete for offering users the best access experience. Therefore, the requirements for hardware and software solution to support highly scalable and highly available services can be summarized as follows:

- **Scalability**, when the load offered to the service increases, system can be scaled to meet the requirement.
- **24x7 availability**, the service as a whole must be available 24x7, despite of transient partial hardware and software failures.
- **Manageability**, although the whole system may be physically large, it should be easy to manage.
- **Cost-effectiveness**, the whole system must be economical to afford and expand.

A single server is usually not sufficient to handle this aggressively increasing load. The server upgrading process is complex, and the server is a single point of failure. The higher end the server is upgraded to, the much higher cost we have to pay.

Clusters of servers, connected by a fast network, are emerging as a viable architecture for building highly scalable and highly available services. This type of loosely coupled architecture is more scalable, more cost-effective and more reliable than a tightly coupled multiprocessor system. However, a number of challenges must be addressed to make a cluster of servers function effectively for scalable network services.

Linux Virtual Server [22] is our solution to the requirements. Linux Virtual Server is a software tool that directs network connections to multiple servers that share their workload, which can be used to build highly scalable and highly available services. Prototypes of Linux Virtual Server have already been used to build many sites of heavy load on the Internet, such as Linux portal www.linux.com, sourceforge.net and UK National JANET Web Cache Services.

Linux Virtual Server directs network connections to the different servers according to scheduling algorithms and makes parallel services of the cluster to appear as a virtual service on a single IP address. Client applications interact with the cluster as if it were a single server. The clients are not affected by interaction with the cluster and do not need modification. Scalability is achieved by transparently adding or removing a node in the cluster. High availability is provided by detecting node or daemon failures and reconfiguring the system appropriately.

2 System Architecture Overview

In this section we present a system architecture for building highly scalable and highly available network services on clusters. The three-tier architecture of LVS illustrated in Figure 1 includes:

- **Load balancer**, is the front end to the service as seen by the outside world. The load balancer directs network connections from clients who know a single IP address for services, to a set of servers that actually perform the work.
- **Server pool**, consits of a cluster of servers that implement the autual services, such as web, ftp, mail, dns, and so on.
- **Backend storage**, provides the shared storage for the servers, so that it is easy for servers to keep the same content and provide the same services.

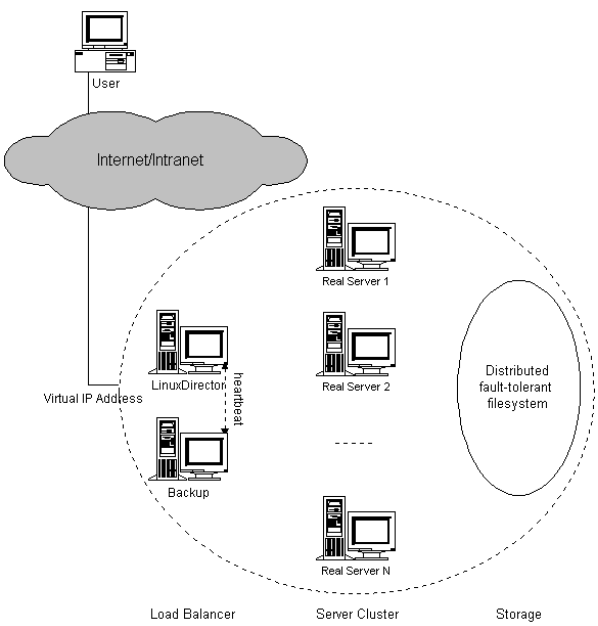

Figure 1: The 3-tier Architecture of Linux Virtual Server

The load balancer handles incoming connections using IP load balancing techniques, it selects servers from the server pool, maintains the state of concurrent connections and forwards packets, and all the work is performed inside the kernel, so that the handling overhead of the load balancer is low. Therefore, the load balancer can handle much larger number of connections than a general server, thus a load balancer can schedule a large number of servers and it will not be a bottleneck of the whole system soon.

The server nodes in the above architecture may be replicated for either scalability or high availablity. Scalability is achieved by transparently adding or removing a node in the cluster. When the load to the system saturates the capacity of existing server nodes, more server nodes can be added to handle the increasing workload. Since the dependence of most network services is often not high, the aggregate performance should scale linearly with the number of nodes in the system, before the load balancer becomes a new bottleneck of the system. Since the commodity servers are used as building blocks, the performance/cost ratio of the whole systemis as high as that of commodity servers.

One of the advantages of a clustered system is that it has hardware and software redundancy. High availability can be provided by detecting node or daemon failures and reconfiguring the system appropriately so that the workload can be taken over by the remaining nodes in the cluster. We usually have cluster monitor daemons running on the load balancer to monitor the health of server nodes, if a server node cannot be reached by ICMP ping or there is no response of the service in the specified period, the monitor will remove or disable the server in the scheduling table of the load balancer, so that the load balancer will not schedule new connections to the failed one and the failure of server nodes can be masked.

Now, the load balancer may become a single failure point of the whole system. In order to prevent the failure of the load balancer, we need setup a backup of the load balancer. Two heartbeat daemons run on the primary and the backup, they heartbeat the health message through heartbeat channels such as serial line and UDP periodically. When the heartbeat daemon on the backup cannot hear the health message from the primary in the specified time, it will use ARP spoofing (gratutious ARP) to take over the virtual IP address to provide the load-balancing service. When the primary recovers from its failure, there are two methods. One is that the primary becomes to the backup of the functioning load balancer; the other is that the daemon receives the health message from the primary and releases the virtual IP address, and the primary will take over the virtual IP address. However, the failover or the takeover of the primary will cause the established connection in the state table lost in the current implementation, which will require the clients to send their requests again.

The backend storage is usually provided by is distributed fault-tolerant file systems, such as GFS [16], Coda [1] or Intermezzo [5]. These systems also take care of availability and scalability issue of file system accesses. The server nodes access the distributed file system like a local file system. However, multiple identical applications running on different server nodes may access a shared resource concurrently, any conflitcing action by the applications must be reconciled so that the resource remains in a consistent state. Thus, there needs a distributed lock manager (internal of the distributed file system or external) so that application developers can easily program to coordinate concurrent access of applications running on different nodes.

3 IP Load Balancing Techniques

Since the IP load balancing techniques have good scalability, we patch the Linux kernel (2.0 and 2.2) to support three IP load balancing techniques, LVS/NAT, LVS/TUN and LVS/DR. The box running Linux Virtual Server act as a load balancer of network connections from clients who know a single IP address for a service, to a set of servers that actually perform the work. In general, real servers are idential, they run the same service and they have the same set of contents. The contents are either replicated on each server's local disk, shared on a network file system, or served by a distributed file system. We call data communication between a client's socket and a server's socket **connection**, no matter it talks TCP or UDP protocol. The following subsections describe the working principles of three techniques and their advantages and disadvantages.

3.1 Linux Virtual Server via NAT

Due to the shortage of IP address in IPv4 and some security reasons, more and more networks use private IP addresses which cannot be used on the Internet. The need for network address translation arises when hosts in internal networks want to access or to be accessed on the Internet. Network address translation relies on the fact that the headers of packets can be adjusted appropriately so that clients believe they are contacting one IP address, but servers at different IP addresses believe they are contacted directly by the clients. This feature can be used to build a virtual server, i.e. parallel services at the different IP addresses can appear as a virtual service on a single IP address.

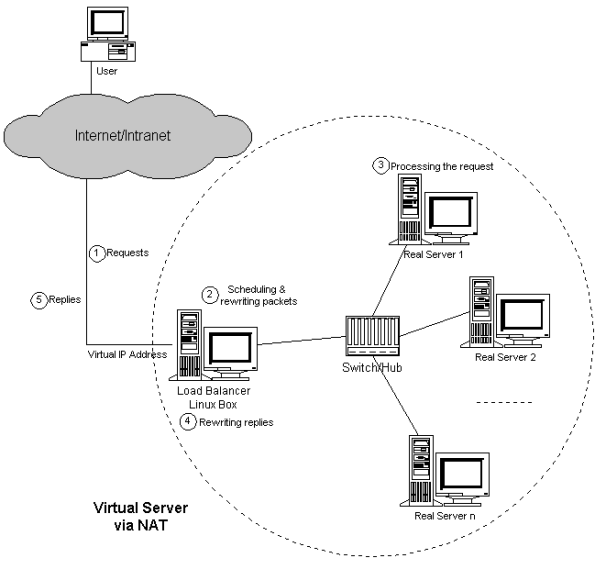

Figure 2: Architecture of LVS/NAT

The architecture of Linux Virtual Server via NAT is illustrated in Figure 2. The load balancer and real servers are interconnected by a switch or a hub. The workflow of LVS/NAT is as follows: When a user accesses a virtual service provided by the server cluster, a request packet destined for virtual IP address (the IP address to accept requests for virtual service) arrives at the load balancer. The load balancer examines the packet's destination address and port number, if they are matched for a virtual service according to the virtual server rule table, a real server is selected from the cluster by a scheduling algorithm, and the connection is added into the hash table which records connections. Then, the destination address and the port of the packet are rewritten to those of the selected server, and the packet is forwarded to the server. When an incoming packet belongs to an established connection, the connection can be found in the hash table and the packet will be rewritten and forwarded to the right server. When response packets come back, the load balancer rewrites the source address and port of the packets to those of the virtual service. When a connection terminates or timeouts, the connection record will be removed in the hash table.

3.2 Linux Virtual Server via IP Tunneling

IP tunneling (IP encapsulation) is a technique to encapsulate IP datagram within IP datagram, which allows datagrams destined for one IP address to be wrapped and redirected to another IP address. This technique can be used to build a virtual server that the load balancer tun-

nels the request packets to the different servers, and the servers process the requests and return the results to the clients directly, thus the service can still appear as a virtual service on a single IP address.

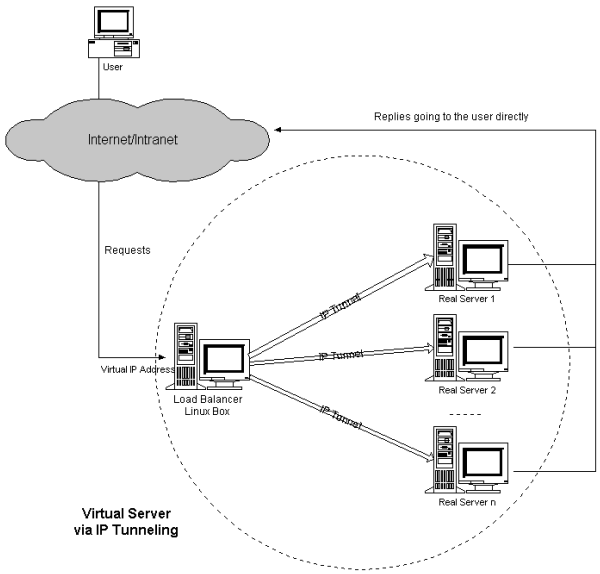

Figure 3: Architecture of LVS/TUN

The architecture of Linux Virtual Server via IP tunneling is illustrated in Figure 3. The real servers can have any real IP address in any network, and they can be geographically distributed, but they must support IP tunneling protocol and they all have one of their tunnel devices configured with VIP.

The workflow of LVS/TUN is the same as that of LVS/NAT. In LVS/TUN, the load balancer encapsulates the packet within an IP datagram and forwards it to a dynamically selected server. When the server receives the encapsulated packet, it decapsulates the packet and finds the inside packet is destined for VIP that is on its tunnel device, so it processes the request, and returns the result to the user directly.

3.3 Linux Virtual Server via Direct Routing

This IP load balancing approach is similar to the one implemented in IBM's NetDispatcher. The architecture of LVS/DR is illustrated in Figure 4. The load balancer and the real servers must have one of their interfaces physically linked by an uninterrupted segment of LAN such as a HUB/Switch. The virtual IP address is shared by real servers and the load balancer. All real servers have their loopback alias interface configured with the virtual IP address, and the load balancer has an interface configured with the virtual IP address to accept incoming packets.

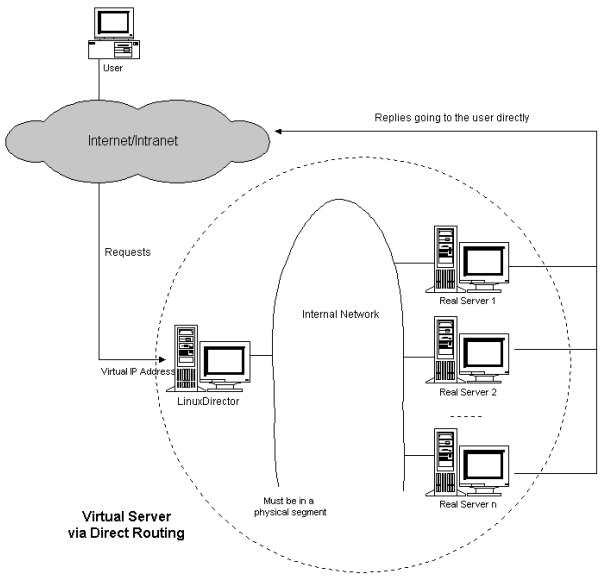

Figure 4: Architecture of LVS/DR

The workflow of LVS/DR is the same as that of LVS/NAT or LVS/TUN. In LVS/DR, the load balancer directly routes a packet to the selected server, i.e. the load balancer simply changes the MAC address of data frame to that of the server and retransmits it on the LAN. When the server receives the forwarded packet, the server finds that the packet is for the address on its loopback alias interface and processes the request, finally returns the result directly to the user. Note that real servers' interfaces that are configured with virtual IP address should not do ARP response, otherwise there would be a collision if the interface to accept incoming traffic for VIP and the interfaces of real servers are in the same network.

Table 1: the comparison of LVS/NAT, LVS/TUN and LVS/DR

	LVS/NAT	LVS/TUN	LVS/DR
Server	any	tunneling	non-arp dev
server network	private	LAN/WAN	LAN
server number	low (10~20)	high (100)	high (100)
server gateway	load balancer	own router	own router

3.4 Advantages and Disadvantages

The characteristics of three IP load balancing techniques are summarized in Table 1.

- **Linux Virtual Server via NAT**

  In LVS/NAT, real servers can run any operating system that supports TCP/IP protocol, and only one IP address is needed for the load balancer and private IP addresses can be used for real servers.

  The disadvantage is that the scalability of LVS/NAT is limited. The load balancer may be a bottleneck of the whole system when the number of server nodes increase to around 20 which depends on the throughout of servers, because both request and response packets need to be rewritten by the load balancer. Supposing the average length of TCP packets is 536 Bytes and the average delay of rewriting a packet is around 60us on the Pentium processor (this can be reduced a little by using of faster processor), the maximum throughout of the load balancer is 8.93 Mbytes/s. The load balancer can schedule 15 servers if the average throughout of real servers is 600KBytes/s.

- **Linux Virtual Server via IP tunneling**

  For most Internet services (such as web service) that request packets are often short and response packets usually carry large amount of data, a LVS/TUN load balancer may schedule over 100 general real servers and it won't be the bottleneck of the system, because the load balancer just directs requests to the servers and the servers reply the clients directly. Therefore, LVS/TUN has good scalability. LVS/TUN can be used to build a virtual server that takes huge load, extremely good to build a virtual proxy server because when the proxy servers receive requests, they can access the Internet directly to fetch objects and return them to the clients directly.

  However, LVS/TUN requires servers support IP Tunneling protocol. This feature has been tested with servers running Linux. Since the IP tunneling protocol is becoming a standard of all operating systems, LVS/TUN should be applicable to servers running other operating systems.

- **Linux Virtual Server via Direct Routing**

  Like LVS/TUN, a LVS/DR load balancer processes only the client-to-server half of a connection, and the response packets can follow separate network routes to the clients. This can greatly increase the scalability of virtual server.

  Compared to LVS/TUN, LVS/DR doesn't have tunneling overhead , but it requires the server OS has loopback alias interface that doesn't do ARP response, the load balancer and each server must be directly connected to one another by a single uninterrupted segment of a local-area network.

3.5 Implemention Issues

The system implementation of Linux Virtual Server is illustrated in Figure 5. The "VS Schedule & Control Module" is the main module of LVS, it hooks two places at IP packet traversing inside kernel in order to grab/rewrite IP packets to support IP load balancing. It looks up the "VS Rules" hash table for new connections, and checks the "Connection Hash Table" for established connections. The "IPVSADM" user-space program is to administrator virtual servers, it uses setsockopt function to modify the virtual server rules inside the kernel, and read the virtual server rules through /proc file system.

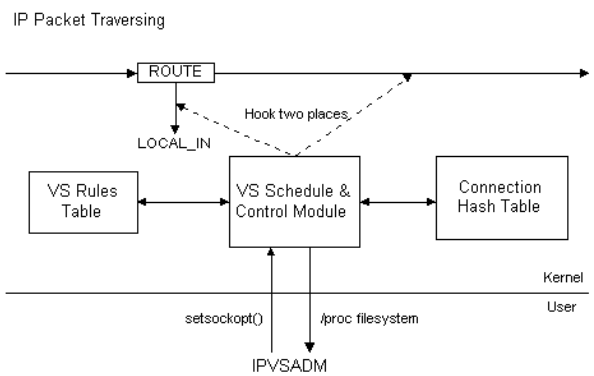

Figure 5: Implementation of LVS

The connection hash table is designed to hold millions of concurrent connections, and each connection entry only occupies 128 bytes effective memory in the load balancer. For example, a load balancer of 256 Mbytes free memory can have two million concurrent connections. The hash table size can be adapted by users according to their applications, and the client $< protocol, address, port >$ is used as hash key so that hash collision is very low. Slow timer is ticked every second to collect stale connections.

LVS implements ICMP handling for virtual services. The incoming ICMP packets for virtual services will be forwarded to the right real servers, and outgoing ICMP packets from virtual services will be altered and sent out correctly. This is important for error and control notification between clients and servers, such as the patch MTU discovery.

LVS implements three IP load balancing techniques.

They can be used for different kinds of server clusters, and they can also be used together in a single cluster, for example, packets are forwarded to some servers through LVS/NAT method, some servers through LVS/DR, and some geographically distributed servers through LVS/TUN.

4 Connection Scheduling

We have implemented four scheduling algorithms for selecting servers from the cluster for new connections: Round-Robin, Weighted Round-Robin, Least-Connection and Weighted Least-Connection. The first two algorithms are self-explanatory, because they don't have any load information about the servers. The last two algorithms count active connection number for each server and estimate their load based on those connection numbers.

4.1 Round-Robin Scheduling

Round-robin scheduling algorithm directs the network connections to the different servers in the round-robin manner. It treats all real servers as equals regardless of number of connections or response time. Although the round-robin DNS works in this way, there are quite different. The round-robin DNS resolves the single domain to the different IP addresses, the scheduling granularity is per host, and the caching of DNS hinder the algorithm take effect, which will lead to significant dynamic load imbalance among the real servers. The scheduling granularity of virtual server is per connection, and it is more superior to the round-robin DNS due to fine scheduling granularity.

4.2 Weighted Round-Robin Scheduling

The weighted round-robin scheduling can treat the real servers of different processing capacities. Each server can be assigned a weight, an integer that indicates its processing capacity, the default weight is 1. The WRR scheduling works as follows:

Assuming that there is a list of real servers $S = \{S_0, S_1, ..., S_{n-1}\}$, an index i is the last selected server in S, the variable cw is current weight. The variables i and cw are first initialized to zero. If all $W(S_i) = 0$, there are no available servers, all the connection for virtual server are dropped.

```
while (1) {
  if (i == 0) {
     cw = cw - 1;
     if (cw <= 0) {
       set cw the maximum weight of S;
       if (cw == 0) return NULL;
     }
  } else i = (i + 1) mod n;
  if (W(Si) >= cw) return Si;
}
```

In the WRR scheduling, all servers with higher weights receives new connections first and get more connections than servers with lower weights, servers with equal weights get an eaqual distribution of new connections. For example, the real servers A,B,C have the weights 4,3,2 respectively, then the scheduling sequence can be AABABCABC in a scheduling period (mod sum(Wi)). The WRR is efficient to schedule request, but it may still lead to dynamic load imbalance among the real servers if the load of requests vary highly.

4.3 Least-Connection Scheduling

The least-connection scheduling algorithm directs network connections to the server with the least number of active connections. This is one of dynamic scheduling algorithms, because it needs to count active connections for each server dynamically. At a virtual server where there is a collection of servers with similar performance, the least-connection scheduling is good to smooth distribution when the load of requests vary a lot, because all long requests will not be directed to a single server.

At a first look, the least-connection scheduling can also perform well even if servers are of various processing capacities, because the faster server will get more network connections. In fact, it cannot perform very well because of the TCP's TIME_WAIT state. The TCP's TIME_WAIT is usually 2 minutes, in which a busy web site often get thousands of connections. For example, the server A is twice as powerful as the server B, the server A has processed thousands of requests and kept them in the TCP's TIME_WAIT state, but but the server B is slow to get its thousands of connections finished and still receives new connections. Thus, the least-connection scheduling cannot get load well balanced among servers with various processing capacities.

4.4 Weighted Least-Connection Scheduling

The weighted least-connection scheduling is a superset of the least-connection scheduling, in which a performance weight can be assigned to each server. The servers with a higher weight value will receive a larger percentage of active connections at any time. The virtual server administrator can assign a weight to each real server, and network connections are scheduled to each server in which the percentage of the current number of active connections for each server is a ratio to its weight.

The weighted least-connections scheduling works as follows: supposing there is n real servers, each server i has weight W_i (i=1,..,n) and active connections C_i (i=1,..,n), all connection number S is the sum of C_i (i=1,..,n), the network connection will be directed to the server j, in which

$$(C_j/S)/W_j = min\{(C_i/S)/W_i\} \text{ (i=1,..,n)}$$

Since the S is a constant in this lookup, there is no need to divide C_i by S, it can be optimized as

$$C_j/W_j = min\{C_i/W_i\} \text{ (i=1,..,n)}$$

Since there is no floats in Linux kernel mode, the comparison of $C_j/W_j > C_i/W_i$ is changed to $C_j * W_i > C_i * W_j$ because all weights are larger than zero.

4.5 Connection Affinity

Up to now, we have assumed that each network connection is independent of every other connection, so that each connection can be assigned to a server independently of any past, present or future assignments. However, there are times that two connections from the same client must be assigned to the same server either for functional or for performance reasons.

FTP is an example for a functional requirement for connection affinity. The client establishs two connections to the server, one is a control connection (port 21) to exchange command information, the other is a data connection (usually port 20) to transfer bulk data. For active FTP, the client informs the server the port that it listens to, the data connection is initiated by the server from the server's port 20 to the client's port. Linux Virtual Server could examine the packet coming from clients for the port that client listens to, and create any entry in the hash table for the coming data connection. But for passive FTP, the server tells the clients the port that it listens to, the client initiates the data connection to that port of the server. For the LVS/TUN and the LVS/DR, Linux Virtual Server is only on the client-to-server half connection, so it is imposssible for Linux Virtual Server to get the port from the packet that goes to the client directly.

SSL (Secure Socket Layer) is an example of a protocol that has connection affinity between a client and a server for performance reasons. When a SSL connection is made, port 443 for secure Web servers and port 465 for secure mail server, a key for the connection must be chosen and exchanged. Since it is time-consuming to negociate and generate the SSL key, the successive connections from the same client can also be granted by the server in the life span of the SSL key.

Our current solution to client affinity is to add persistent port handling. When a client first accesses the service marked persistent, the load balancer will create a connection template between the given client and the selected server, then create an entry for the connection in the hash table. The template expires in a configurable time, and the template won't expire if it has its controlled connections. Before the template expires, the connections for any port from the client will send to the right server according to the template. Although the persistent port may cause slight load imbalance among servers because its scheduling granularity is per host, it is a good solution to connection affinity.

5 Cluster Management

Cluster management is a serious concern for LVS systems of many nodes. First, the cluster management should make it easier for system administrators to setup and manage the clusters, such as adding more machines earlier to improve the throughput and replacing them when they break. Second, the management software can provide self-configuration with respect to different load distribution and self-heal with node/service failure and recovery. We presents some representative solutions of cluster management for LVS, definitely there must be lots of other solutions.

5.1 Piranha

Piranha [20] is the clustering products from Red Hat Inc., which is shipped in Red Hat Linux 6.1 distribution or later. Piranha includes the LVS kernel patch, cluster monitor daemons and GUI administrative tools.

The **nanny** daemon is to monitor server nodes and the corresponding services in the cluster, and the **pulse** daemon is to control the nanny daemons and handle failover between two load balancers. The pulse daemon forks one nanny daemon for each real server. When the nanny daemon cannot receive the response from the server node and the service in the specified time, it will remove the server from the scheduling table in the kernel. The nanny daemon also adapts server weight with respect to server nodes in order to avoid the server is overloaded. When the nanny finds the server load is higher than normal value, it will decrease the server weight in the scheduling table in the kernel, so that the server will receive less connections, vice versa.

5.2 lvs-gui + heartbeat + ldirectord

The lvs-gui [13] enables the configuration of servers running The LVS kernel patches, at this stage lvs-gui only supports the configuration of LVS/DR. The "heartbeat" [17] provides heartbeats (periodical communication) among server nodes. The "ldirectord" written by Jacob Rief is a daemon to monitor and administer real servers in a cluster of load balanced virtual servers.

The server failover is handled as follows: The ldirectord daemon is running on the load balancer, and one ldirectord daemon monitors all the real servers of a virtual service at a regular interval. If a real server fails, it will be removed from that list, and it will be added back if the server recovers.

The load balancer failover is processed as follows: the heartbeat daemons run on both the primary load balancer and the backup, they heartbeat the message each other through the UDP and/or serial line periodically. When the heartbeat daemon of the backup cannot hear the message from the primary in the specified time, it will activate the fake [12] to take over the virtual IP address to provide the load-balancing service; when it receives the message from the primary later, it will deactivate the fake to release the virtual IP address, and the primary will take over the virtual IP address.

5.3 mon + heartbeat

The "mon" [19] is a general-purpose resource monitoring system, which can be extended to monitor network service availability and server nodes. The mon service modules such as fping.monitor, http.monitor, ldap.monitor and so on can be used to monitor services on the real servers. An alert was written to remove/add an entry in the scheduling table while detecting the server node or daemon is down/up. Therefore, the load balancer can automatically mask service daemons or servers failure and put them into service when they are back. The heartbeat is used to handle failover between two load balancers too.

6 Alternative Approaches

In the client/server applications, one end is the client, the other end is the server, and there may be a proxy in the middle. Based on this scenario, we can see that there are many ways to dispatch requests to a cluster of servers in the different levels. Existing request dispatching techniques can be classified into the following categories:

- **The client-side approach**

  Berkeley's Smart Client [21] suggests that the service provide an applet running at the client side. The applet makes requests to the cluster of servers to collect load information of all the servers, then chooses a server based on that information and forwards requests to that server. The applet tries other servers when it finds the chosen server is down. However, these client-side approaches are not client-transparent, they requires modification of client applications, so they cannot be applied to all TCP/IP services. Moreover, they will potentially increase network traffic by extra querying or probing.

- **The server-side Round-Robin DNS approach**

  The NCSA scalable web server is the first prototype of a scalable web server using the Round-Robin DNS approach [14, 15, 6]. The RRDNS server maps a single name to the different IP addresses in a round-robin manner so that the different clients will access the different servers in the cluster for the ideal situation and load is distributed among the servers. However, due to the caching nature of clients and hierarchical DNS system, it easily leads

to dynamic load imbalance among the servers, thus it is not easy for a server to handle its peak load. The TTL(Time To Live) value of a name mapping cannot be well chosen at RR-DNS, with small values the RR-DNS will be a bottleneck, and with high values the dynamic load imbalance will get even worse. Even the TTL value is set with zero, the scheduling granularity is per host, different client access pattern may lead to dynamic load imbalance, because some clients (such as a proxy server) may pull lots of pages from the site, and others may just surf a few pages and leave. Futhermore, it is not so reliable, when a server node fails, the clients who maps the name to the IP address will find the server is down, and the problem still exists even if they press "reload" or "refresh" button in the browsers.

- **The server-side application-level scheduling approach**

  EDDIE [7] , Reverse-proxy [18] and SWEB [4] use the application-level scheduling approach to build a scalable web server. They all forward HTTP requests to different web servers in the cluster, then get the results, and finally return them to the clients. However, this approach requires to establish two TCP connections for each request, one is between the client and the load balancer, the other is between the load balancer and the server, the delay is high. The overhead of dealing HTTP requests and replies in the application-level is high. Thus the application-level load balancer will be a new bottleneck soon when the number of server nodes increases.

- **The server-side IP-level scheduling approaches**

  Berkeley's MagicRouter [3] and Cisco's LocalDirector [2] use the Network Address Translation approach similar to the NAT approach used in Linux Virtual Server. However, the MagicRouter doesn't survive to be a useful system for others, the LocalDirector is too expensive, and they only support part of TCP protocol.

  IBM's TCP router [9] uses the modified Network Address Translation approach to build scalable web server on IBM scalable Parallel SP-2 system. The TCP router changes the destination address of the request packets and forwards the chosen server, that server is modified to put the TCP router address instead of its own address as the source address in the reply packets. The advantage of the modified approach is that the TCP router avoids rewriting of the reply packets, the disadvantage is that it requires modification of the kernel code of every server in the cluster. NetDispatcher [10] , the successor of TCP router, directly forwards packets to servers that is configured with router address on non arp-exported interfaces. The approach, similar to the LVS/DR in Linux Virtual Server, has good scalability, but NetDispatcher is a very expensive commercial product.

  ONE-IP [8] requires that all servers have their own IP addresses in a network and they are all configured with the same router address on the IP alias interfaces. Two dispatching techniques are used, one is based on a central dispatcher routing IP packets to different servers, the other is based on packet broadcasting and local filtering. The advantage is that the rewriting of response packets can be avoided. The disadvantage is that it cannot be applied to all operating systems because some operating systems will shutdown the network interface when detecting IP address collision, and the local filtering also requires modification of the kernel code of server.

7 Conclusions and Future Work

Linux Virtual Server extends the TCP/IP stack of Linux kernel (2.0 and 2.2) to support three IP load balancing techniques, LVS/NAT, LVS/TUN and LVS/DR. Currently, four scheduling algorithms have been developed to meet different application situations. Scalability is achieved by transparently adding or removing a node in the cluster. High availability is provided by detecting node or daemon failures and reconfiguring the system appropriately. The solutions require no modification to either the clients or the servers, and they support most of TCP and UDP services. Linux Virtual Server is designed for handling millions of concurrent connections. With many open source development efforts, LVS-based systems are becoming easy to use. Prototypes of LVS have already been used to build highly loaded real-life Internet sites.

Limitations of current LVS are as follows. Since LVS just supporting IP load balancing techniques, it cannot do content-based scheduling to different servers, but requires that servers provide the same services so that new connections can be assigned to any server. The failover or takeover of the primary load balancer to the backup will cause the established connection in the state table lost, which will require the clients to send their requests again to access the services.

In the future, we would like to port the LVS stuff un-

der the NetFilter framework in kernel 2.3 or 2.4. We would like to develop TCP redirector daemon inside the kernel, since it is performed inside the kernel, its scalability should not much behind that of IP load balancing techniques, but we will get a lot of flexibility, we can parse requests and do content-based scheduling, and we can explore higher degrees of fault-tolerance; transaction and logging process [11] would be tried to add in the load balancer so that the load balancer can restart the request on another server and the client need not send the request again. We would also like to implement kernel daemons like kflushd to transfer connection state from the primary load balancer to the backup periodically, so that state of existing connections will not be lost when the primary fails over or takes over. Finally, we would like to move IP load balancing (and TCP load balancing) stuff to the Linux Cluster Infrastructure proposed by Stephen Tweedie as load balancing components.

Acknowledgements

We would like to thank Julian Anastasov for his bug fixes, suggestions and smart comments to the LVS code. Thanks must go to many other contributors to the Linux Virtual Server project too.

References

[1] The coda project. CMU Coda Team, 1987-now. http://www.coda.cs.cmu.edu/.

[2] Cisco local director. Cisco Systems, Inc., 1998. http://www.cisco.com/warp/public/751/lodir/index.html.

[3] E. Anderson, D. Patterson, and E. Brewer. The magicrouter: an application of fast packet interposing. http://www.cs.berkeley.edu/ eanders/magicrouter/, May 1996.

[4] D. Andresen, T. Yang, and O. H. Ibarra. Towards a scalable distributed www server on workstation clusters. In *Proc. of 10th IEEE Intl. Symp. Of Parallel Processing (IPPS'96)*, pages 850–856, Arpil 1996. http://www.cs.ucsb.edu/Research/rapid_sweb/SWEB.html.

[5] P. Braam and et al. The intermezzo project. http://intermezzo.org/, 1999-now.

[6] T. Brisco. Dns support for load balancing. http://www.ietf.org/rfc/rfc1794.txt, April 1995. RFC 1794.

[7] A. Dahlin, M. Froberg, J. Walerud, and P. Winroth. Eddie: A robust and scalable internet server. http://www.eddieware.org/, 1998 - now.

[8] O. P. Damani, P. E. Chung, and Y. Huang. One-ip: Techniques for hosting a service on a cluster of machines. http://www.cs.utexas.edu/users/damani/, August 1997.

[9] D. Dias, W. Kish, R. Mukherjee, and R. Tewari. A scalable and highly available server. In *COMPCON 1996*, pages 85–92, 1996.

[10] G. Goldszmidt and G. Hunt. Netdispatcher: A tcp connection router. http://www.ics.raleigh.ibm.com/netdispatch/, May 1997.

[11] J. Gray and T. Reuter. *Transaction Processing Concepts and Techniques*. Morgan Kaufmann, 1994.

[12] S. Horman. Creating redundant linux servers. In *The 4th Annual LinuxExpo Conference*, May 1998. http://vergenet.net/linux/fake/.

[13] S. Horman and C. Haitzler. lvs-gui: Gui for the linux virtual servers. http://www.vergenet.net/linux/lvs-gui/, 2000.

[14] E. D. Katz, E. D. Katz, and R. McGrath. A scalable http server: The ncsa prototype. *Computer Networks and ISDN Systems*, pages 155–163, May 1994.

[15] T. T. Kwan, R. E. McGrath, and D. A. Reed. Ncsa's world wide web server: Design and performance. *IEEE Computer*, pages 68–74, November 1995.

[16] K. W. Preslan, A. P. Barry, J. E. Brassow, G. M. Erickson, E. Nygaard, C. J. Sabol, S. R. Soltis, D. C. Teigland, and M. T. O'Keefe. A 64-bit, shared disk file system for linux. In *The 6th IEEE Mass Storage Systems Symposium jointed with the 7th NASA Goddard Conference on Mass Storage Systems & Technologies*, 1999. http://www.globalfilesystem.org/.

[17] A. Robertson and et al. High-availability linux project. http://www.linux-ha.org/, 1998-now.

[18] R. S.Engelschall. Load balancing your web site: Practical approaches for distributing http traffic. *Web Techniques Magazine*, 3(5), May 1998. http://www.webtechniques.com/.

[19] J. Trocki. mon: Service monitoring daemon. http://www.kernel.org/software/mon/, 1998-now.

[20] M. Wangsmo. White paper: Piranha - load-balanced web and ftp clusters. http://www.redhat.com/support/wpapers/piranha/, 1999.

[21] C. Yoshikawa, B. Chun, P. Eastharn, A. Vahdat, T. Anderson, and D. Culler. Using smart clients to build scalable services. In *USENIX'97 Proceedings*, 1997. http://now.cs.berkeley.edu/.

[22] W. Zhang and et al. Linux virtual server project. http://www.LinuxVirtualServer.org/, 1998-now.