IXP12EB Intel® IXP1200 Network Processor Ethernet Evaluation Kit

developer.intel.com/
design/network

Product Highlights

- Evaluation platform for the IXP1200 Network Processor
- Optimized in a wire-speed, store-and-forward configuration
- Eight-port 10/100 Ethernet controller
- Two-port Gigabit Ethernet controller
- SRAM and SDRAM subsystems
- Serial port
- Supports IXP12DE software development environment
- Software libraries
- Sample application code, boot code and diagnostics
- Device drivers, route and bridge table managers
- Board support package for WindRiver* VxWorks*

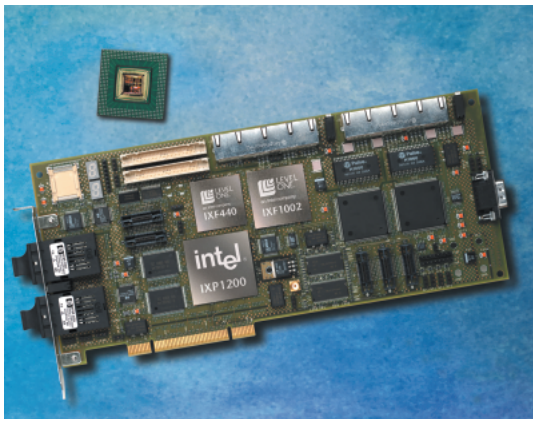

Product Overview

The IXP12EB Ethernet Evaluation Kit is a powerful tool for developing and verifying hardware and software for the IXP1200 Network Processor, the cornerstone of the Intel® Internet Exchange™ (IX) architecture. The kit supports the IXP12DE software development environment for programming the Network Processor's microengines and integrated Intel® StrongARM* processor core. This enables developers to write, assemble and optimize, debug and verify symbolic microcode using IXP1200 Network Processor hardware.

The hardware design is optimized in a wire-speed, store-and-forward configuration. It enables system simulation in conjunction with a host system (typically a network-based PC) to validate data paths, chip functionality, system functionality, device driver behavior, and functionality of board support package software.

The IXP12EB Ethernet Evaluation Kit includes a PCI form factor board based on the IXP1200 Network Processor. The PCI board has eight 10/100 Mbps ports and two Gigabit Ethernet ports. The kit also includes a passive PCI back-plane and an Ethernet Network Interface Card (NIC) that enables the system's host processor to communicate efficiently to the IXP1200 Network Processor. All three boards are housed and shipped in a 4U chassis.

The IXP12EB kit simplifies evaluation of the following characteristics:

- IXP1200 Network Processor functionality in a network wire-speed store-and-forward configuration.
- Use of the IXP1200 Network Processor as a network switch solution to perform bridging and routing functions with multiple 10/100 Mbps and Gigabit Ethernet ports.
- Performance capabilities of a single IXP1200 Network Processor running example network code. The kit will process and forward at wire speed (approximately three million packets/sec.) using Layer 2 and Layer 3 packet inspection on minimum-size packets, and a longest-prefix match algorithm.
- Electrical, mechanical, and component layouts used in a typical IXP1200 Network Processor design. The evaluation kit design illustrates how to interface various devices to the IXP1200 Network Processor via the IX Bus, providing a design reference for developers using the IXF1002 Dual-Port Gigabit Ethernet media access controller (MAC) and the 21440AD 8-Port 10/100 Mbps Ethernet controller.

Programming the IXP1200 Network Processor

The IXP1200 is the industry's first true network processor and the cornerstone of the Intel Internet Exchange (IX) architecture. The IXP1200 Network Processor combines a world-class microprocessor core with multiple high-performance microengines that can be reprogrammed to satisfy rapidly changing network control requirements. The Network Processor's software-programmability protects future product generations and enables developers to replace many functions previously designed in complex ASICs.

Versatile Applications

The IXP1200 Network Processor provides the scalable performance and programmability for designing a wide variety of intelligent, upgradable network and telecommunications equipment. Enterprise, access, and service provider/carrier applications that can benefit from this versatility include multi-service switches, routers and aggregation platforms; VPN, firewall and intrusion detection systems;VoIP gateways; and web switch appliances.

IXP12EB Block Diagram

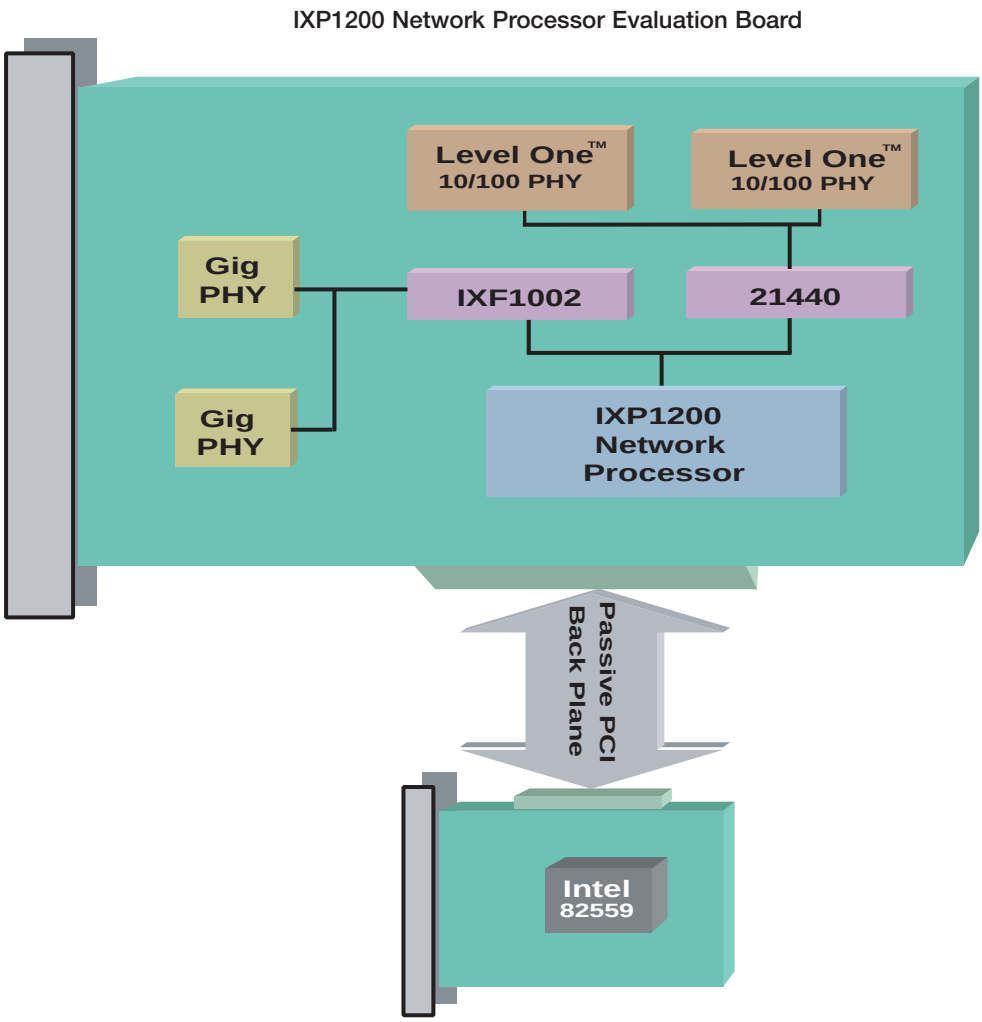

Features and Benefits

Hardware Features	Benefits
IXP1200 Network Processor	An advanced network forwarding engine that is both powerful and flexible
21440AD 8-Port 10/100 Mbps Ethernet Controller	Provides eight 10/100 Mbps Ethernet ports/slow ports
IXF1002 Dual Port Gigabit Ethernet Controller	Provides two Gigabit Ethernet ports/fast ports
Micron MT58LC128K32C6LG-6.6 SSRAM **Micron MT58LC256K32C6LG-6.6 SSRAM** **SRAM Subsystem**	SSRAM contains lookup tables and buffers free-lists for processing cells, frames, and packets
Intel Flash 28F800B3B-90	Reliable system boot capability
Micron's 64 Meg Synchronous DRAM (SDRAM) **1 Meg x 16 x 4 Micron MT48LC16M4A2TG-8E** **SDRAM Subsystem**	SDRAM memory contains large data structures such as packet/cell/frame data and forwarding table information. It also holds the StrongARM® processor core instruction code space during runtime
Serial Port	Provides hardware debug capability or console interface—9600 Baud

Software Features	Benefits
IXP12DE Network Processor Development Environment	Software workbench for programming the IXP1200 Network Processor
Software libraries	Accelerated software development to help speed time-to-market
Example application code	
Sample boot code and diagnostics	
Device drivers	
Route and bridge table managers	
Board support package for WindRiver VxWorks	

Specifications

Description	Specification
Regulatory Testing and Safety Approval	FCC Class A, CE
Physical Dimensions	(L) 28 7/8 in. x (W) 26 ¼ in. x (D) 13 3/8 in.
Weight	22 ¼ lbs.
Power	110 / 220 Volts (Selectable)
Operating Temperature	10°C to 32°C

A New Approach to Development

The Intel IX Architecture is a comprehensive family of feature-rich silicon and software building blocks and tools that accelerates development of powerful, flexible network and communications products. The cornerstone of the Intel Internet Exchange Architecture is the Intel IXP1200 network processor–which combines the performance and programmability to develop intelligent, differentiated network solutions–at the speed of Internet growth.

For more information on Intel's family of Network Processor products, please visit http://developer.intel.com/design/network

IXP12EB User Configuration

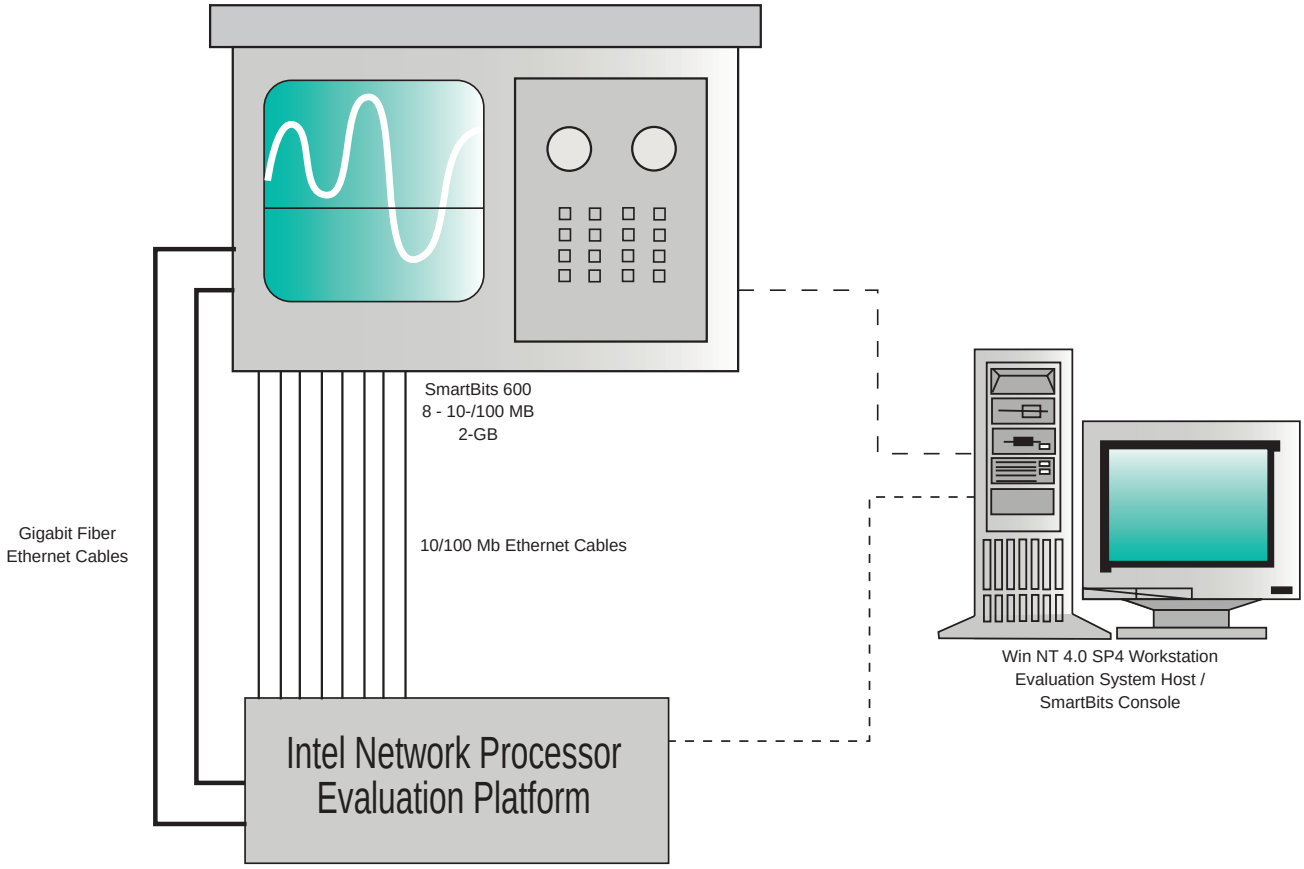

Intel Access

Developer's Site	http://developer.intel.com/
Networking Components Home Page	http://developer.intel.com/design/network
Other Intel Support: Intel Literature Center	http://developer.intel.com/design/litcentr/ (800) 548-4725 7 a.m. to 7 p.m. CST (U.S. and Canada) International locations please contact your local sales office.
General Information Hotline	(800) 628-8686 or (916) 356-3104 5 a.m. to 5 p.m. PST

Information in this document is provided in connection with Intel products. No license, express or implied, by estoppel or otherwise, to any intellectual property rights is granted by this document. Except as provided in Intel's Terms and Conditions of Sale for such products, Intel assumes no liability whatsoever, and Intel disclaims any express or implied warranty, relating to sale and/or use of Intel products including liability or warranties relating to fitness for a particular purpose, merchantability, or infringement of any patent, copyright or other intellectual property right. Intel products are not intended for use in medical, life saving, or life sustaining applications. Intel may make changes to specifications and product descriptions at any time, without notice.

Designers must not rely on the absence or characteristics of any features or instructions marked "reserved" or "undefined." Intel reserves these for future definition and shall have no responsibility whatsoever for conflicts or incompatibilities arising from future changes to them.

*Other brands and names are the property of their respective owners.

For more information, visit the Intel Web site at: **developer.intel.com**

UNITED STATES AND CANADA
Intel Corporation
Robert Noyce Bldg.
2200 Mission College Blvd.
P.O. Box 58119
Santa Clara, CA 95052-8119
USA

EUROPE
Intel Corporation (UK) Ltd.
Pipers Way
Swindon
Wiltshire SN3 1RJ
UK

ASIA-PACIFIC
Intel Semiconductor Ltd.
32/F Two Pacific Place
88 Queensway, Central
Hong Kong, SAR

JAPAN
Intel Kabushiki Kaisha
P.O. Box 115 Tsukuba-gakuen
5-6 Tokodai, Tsukuba-shi
Ibaraki-ken 305
Japan

SOUTH AMERICA
Intel Semicondutores do Brazil
Rue Florida, 1703-2 and CJ22
CEP 04565-001 Sao Paulo-SP
Brazil

© Intel Corporation 2000

Order # 279015-001 Printed in USA/0400/5K/IL0971B CM